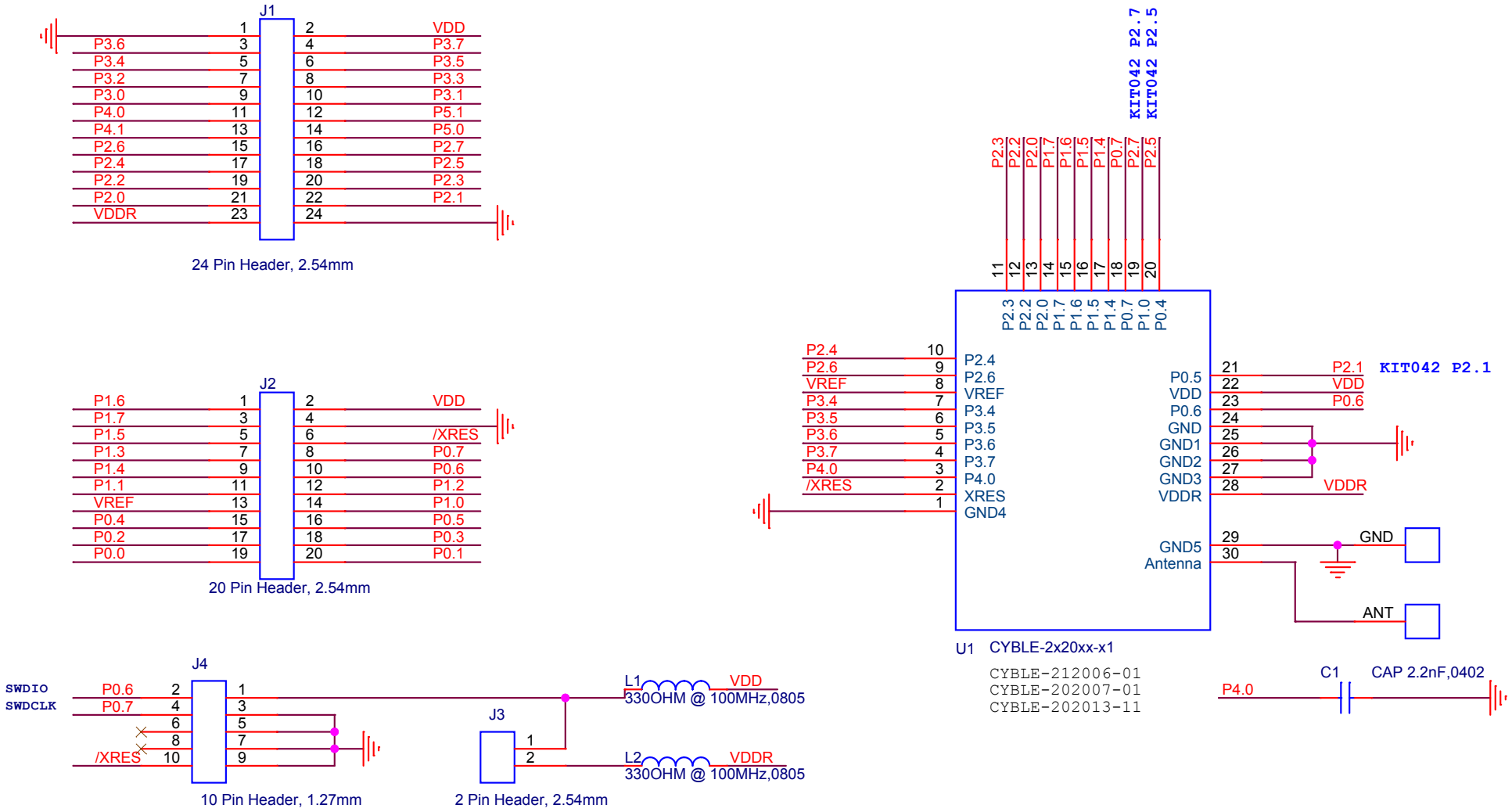

MiniProg3 Interface

Kit042 PIN	BLE MODULE PIN
P2.7	P1.0
P2.1	P0.5
P2.5	P0.4

PCB: 600-20097-01
FAB DRW: 610-20097-01
ASSY DRW: 620-20097-01

CYPRESS SEMICONDUCTOR 2015

Title: CYBLE-212006/202007/202013-EVAL		
Size: A	Document Number: 630-20097-01	Rev: 1.0_1
Date: Friday, August 03, 2018	Sheet 1 of 1	